Local Authority stamp

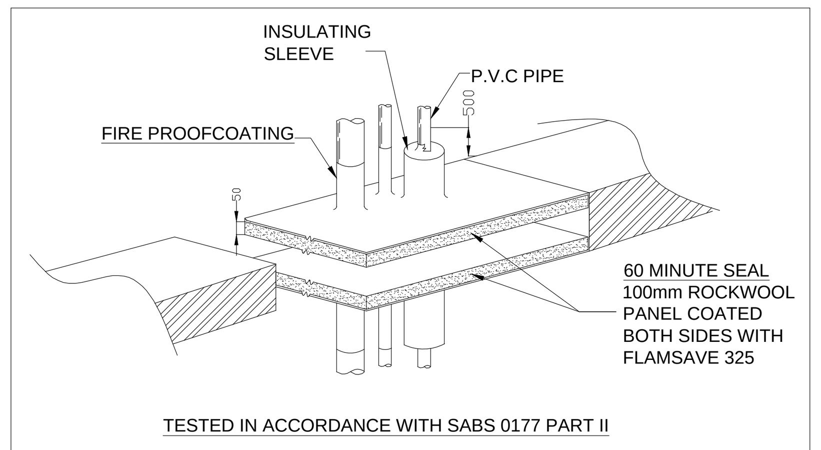

TESTED IN ACCORDANCE WITH SABS 0177 PART II

TYPICAL CABLE FIRE PROOFING DETAIL (scale 1:25)

CLOUDED INDICATES EXISTING TO REMAIN

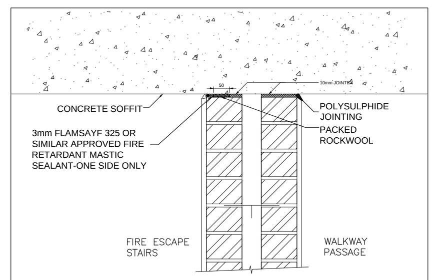

TYPICAL FIRE SEALING DETAIL
1 HOUR FIRE RATED WALLS (scale 1:20)

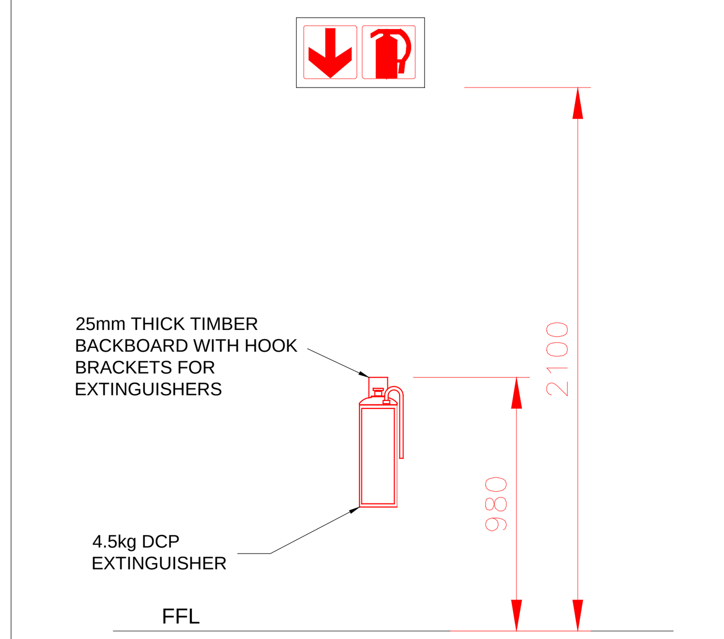

DETAIL FIRE EXTINGUISHER (scale 1: 25)

ELEVATION

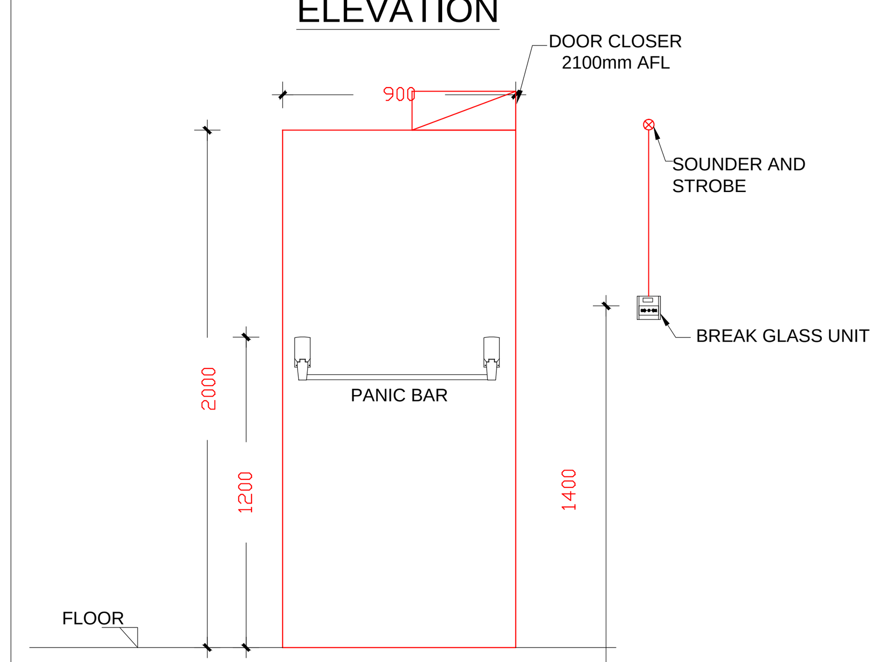

PANIC BAR DETAIL (scale 1:25)

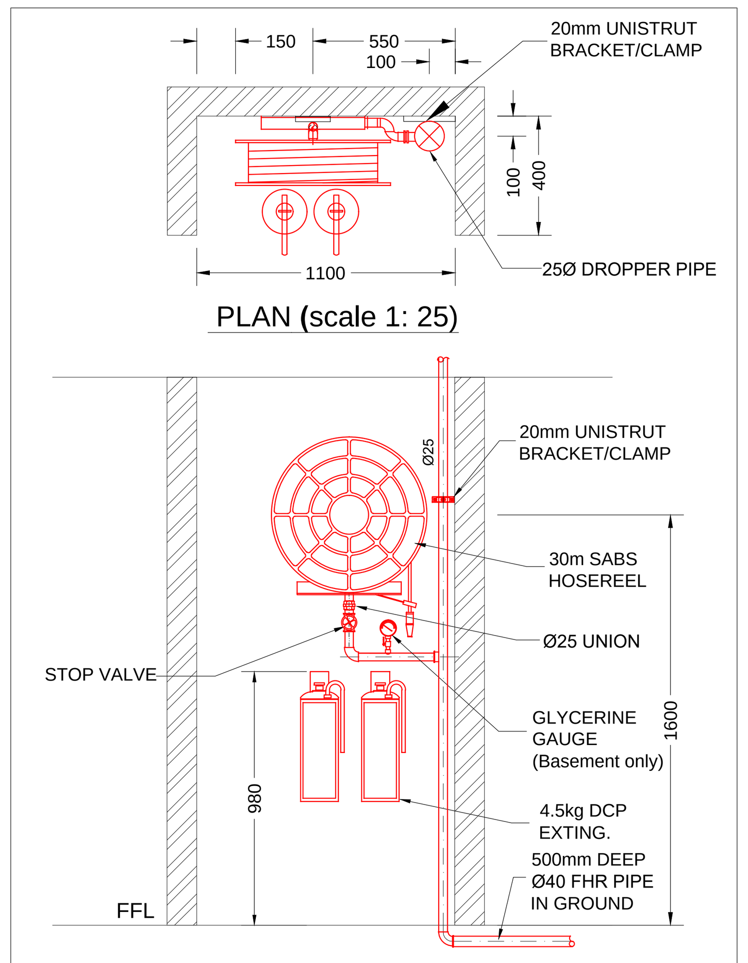

FIRE HOSE & EXTINGUISHER ELEVATION (scale 1: 25)

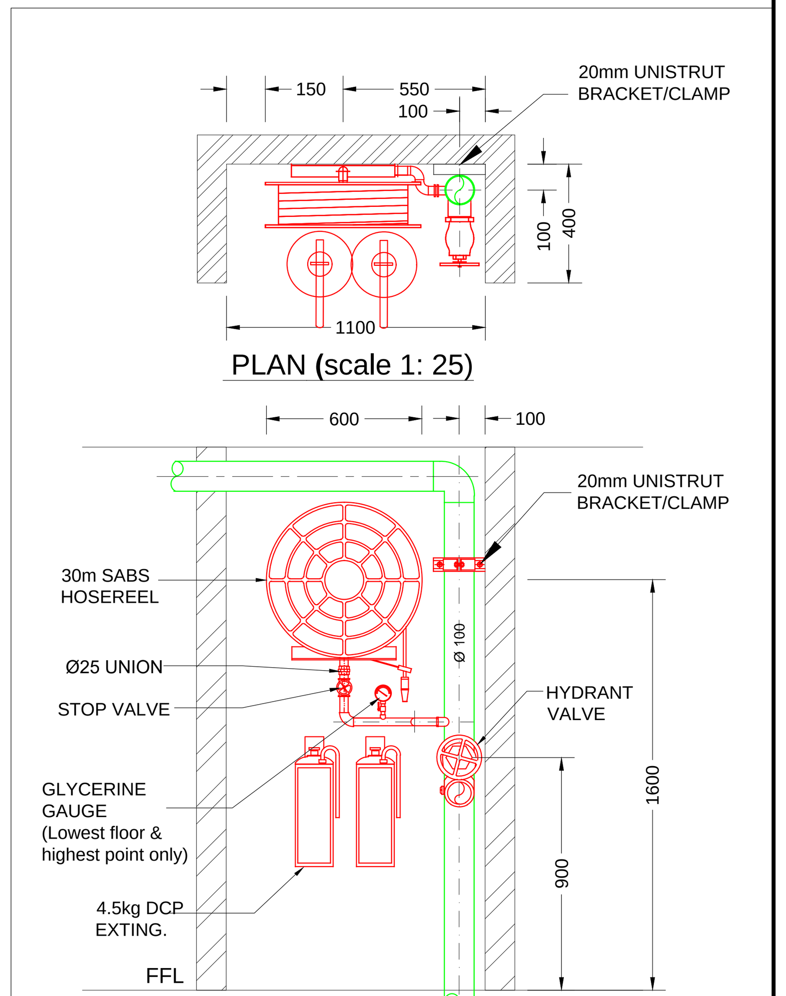

HYDRANT, FIRE HOSE & EXTINGUISHER ELEVATION (scale 1: 25)

BLOCK C

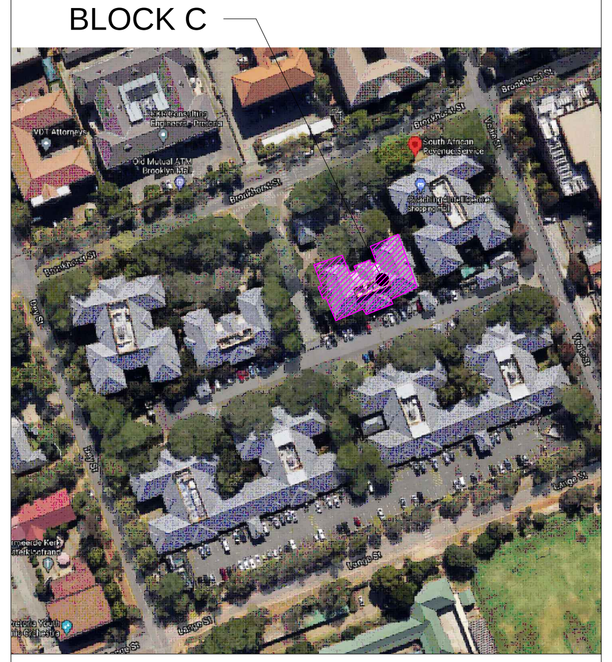

SITE LOCATION

SCOPE OF WORKS CLARIFICATION

A. FIRE CONTRACTOR
1. SERVICE AND RE-USE EXISTING FIRE EXTINGUISHERS AND 1-OFF FIRE HOSE REELS.
2. SUPPLY & INSTALL NEW FIRE FIGHTING EQUIPMENT AS INDICATED ON PLAN.
3. SUPPLY & INSTALL NEW FIRE SIGNAGE AS INDICATED ON PLAN.
4. NEW EVACUATION PLANS & PROCEDURES.

B. ELECTRICAL CONTRACTOR
1. SUPPLY AND INSTALL EMERGENCY LIGHTING THROUGHOUT THE SPACE AS SHOWN ON PLAN, c/w BATTERY BACKUP.

C. BUILDER.
1. SUPPLY AND INSTALL PANIC BARS c/w WHITE ON GREEN "PUSH BAR TO OPEN" SIGN
2. PROVIDING PENETRATIONS THROUGH CEILINGS AND WALLS AND MAKING GOOD THEREOF.
3. FIXING OF EXTINGUISHER BACKING BOARDS TO WALLS SUPPLIED BY FIRE CONTRACTOR.
4. SUPPLY & INSTALL NEW FIRE DOORS C/W 25mm STEEL FRAME AND DOOR CLOSER.
5. FIRE SEALING OF PENETRATIONS THROUGH FIRE WALLS.

FIRE DOOR SCHEDULE

DOOR TAG	SWING	FIRE RATING	DOOR SIZE WIDTH (mm)	DOOR SIZE HEIGHT (mm)	NORMAL DOOR OPEN	NORMAL DOOR CLOSED	PANIC BAR	DOOR CLOSER	HOLD OPEN
FD_1	ONE WAY	60 minute	813	2100	N/A	YES	NO	YES	NO
FD_2	ONE WAY	60 minute	1167	2100	N/A	YES	NO	YES	NO
FD_3	ONE WAY	60 minute	1165	2100	N/A	YES	NO	YES	NO

NEW FIRE SIGNS & EQUIPMENT COUNT

SYMBOL																			
REFERENCE	E1	E2	E3	E6	E16	E17	F13	F1	F2	F3	F5	F6	F45	F31	EXT	HYD	BGU	GBGU
QUANTITY	3	3	2	1	1	1	2	1	1	1	2	2	1	2	4	1	2	2

EXISTING FIRE SIGNS & EQUIPMENT COUNT

SYMBOL				
REFERENCE	F13	E3	FHR	EXT
QUANTITY	4	2	1	3

FIRE SERVICES DESIGN SUMMARY SCHEDULE

1	OCCUPANCY INFORMATION				
1.1	FLOOR AREA:	657	m²		OCCUPIED
1.2	OCCUPANCY CLASS:	G1			OFFICE
1.3	POPULATION:	1/	SEAT	152	NUMBER OF PEOPLE
1.4	ROUTES OF ESCAPE required:		2		1-OFF 1386mm & 1-OFF 1061mm WIDE DOOR
2	FIRE PROTECTION EQUIPMENT				
2.1	FIRE HYDRANT:	1/	1000	m² = 1	REQUIRED, 90 METERS APART
2.2	FIRE HOSE REEL:	1/	500	m² = 1	REQUIRED, WITH 30 METER LONG HOSES
2.3	EXTINGUISHERS:	1/	200	m² = 3	REQUIRED, 4.5 kG DCP TYPE
2.4	SPRINKLER PROTECTIONS:	NO	NOT REQUIRED		
3	RELATED SERVICES				
3.1	FIRE DETECTION:	YES	THROUGHOUT THE BUILDING IN ACCORDANCE WITH SANS 10139:2021(Category L1)		
3.2	SMOKE VENTILATION:	NO	COMPARTMENTALISED TO LESS THAN 500m²		

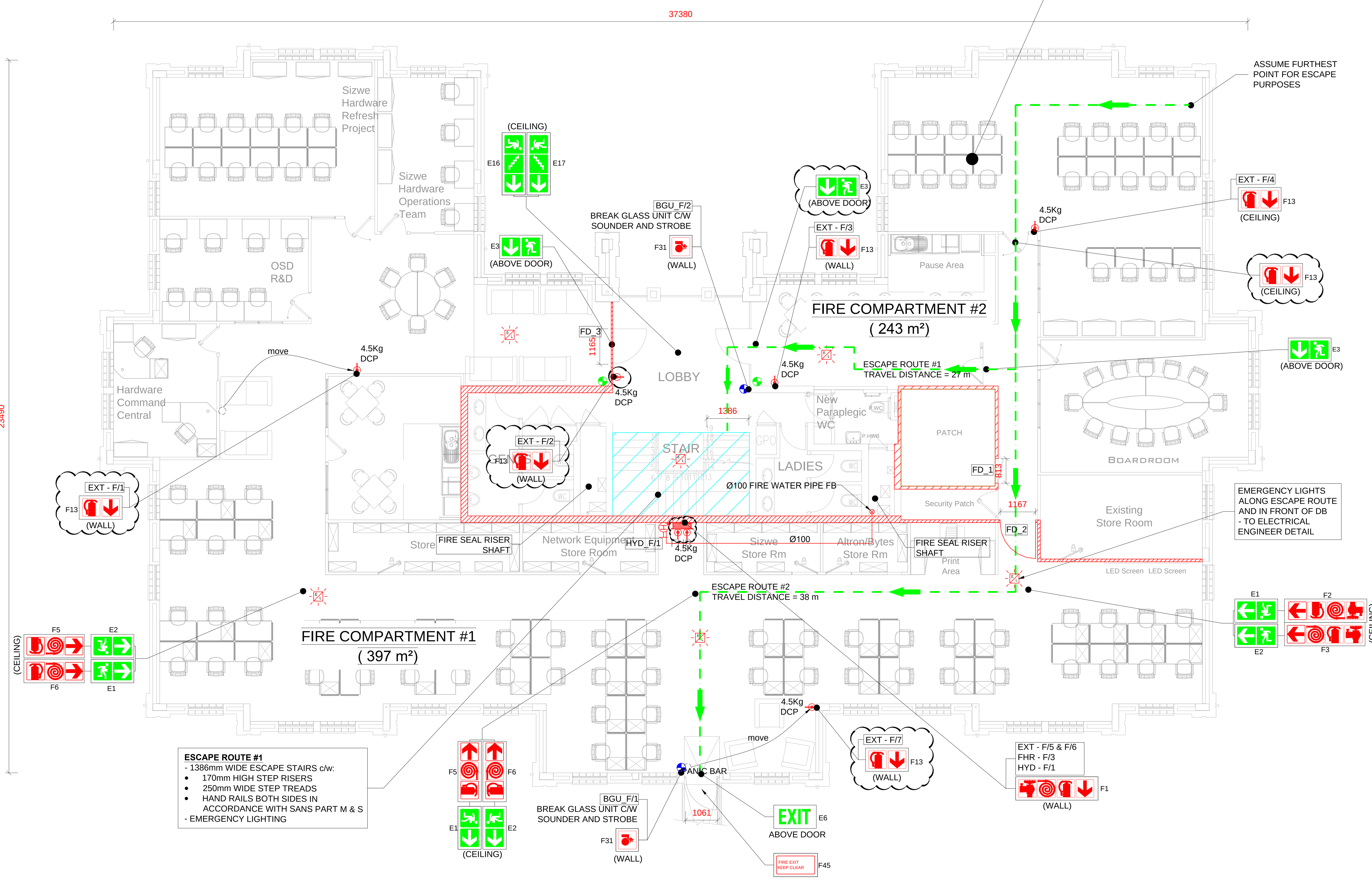

FIRST STOREY - PROPOSED FIRE SERVICES LAYOUT (Scale 1:100)

FIRE INSTALLATION NOTES

PORTABLE FIRE EXTINGUISHERS
FIRE EXTINGUISHERS SHALL BE 4.5kg AND 9kg DRY CHEMICAL POWDER TYPE AND SHALL COMPLY WITH SABS 810.
ALL FIRE EXTINGUISHERS SHALL BE MOUNTED ON WOODEN BACKING BOARDS.

FIRE HOSE REELS
FIRE HOSE REELS SHALL CONFORM TO SABS 543.
ALL FIRE HOSE REELS SHALL BE COMPLETE WITH 30 METERS OF HOSE AND SHALL HAVE A MINIMUM FLOW RATE OF 0,5 l/s AT 300 kPa.

FIRE HYDRANTS
FIRE HYDRANTS SHALL COMPLY WITH SABS 543 AND HAVE A MINIMUM FLOW RATE OF 20 l/s AT 300 kPa.

PIPING
NO PIPEWORK TO BE EMBEDDED IN SCREED OR CONCRETE FLOORS.
ALL PIPEWORK SHALL CONFORM TO SABS 62 (STEEL, MEDIUM).

THE DISTANCE BETWEEN PIPE SUPPORT BRACKETS FOR THE HORIZONTAL & VERTICAL PIPEWORK, SHALL NOT EXCEED THE FOLLOWING:

NOMINAL DIAMETER	MAXIMUM SPACING
< 65 MM	4M
> 65MM <100MM	6.1M

PIPING SHALL BE PROPERLY CLEANED OFF SITE, FROM RUST & LOOSE MILL SCALE WITH A HARD WIRE, & DECREASED PRIOR TO APPLICATION OF A RED OXIDE PRIMER.FINAL COATS OF PAINT TO BE 2 OFF SIGNAL RED, HIGH GLOSS ENAMEL TO SABS 630.
ALL BRACKETS, SUPPORTS & FITTINGS TO BE GALVANIZED.
ALL SCREWED JOINTS TO COMPLY WITH BS 21 OR SIMILAR.
SEALING OF JOINTS WILL BE WITH HEMP, STOGG OR PTFE TAPE, HYDRAULIC PRESSURE TESTING SHALL BE DONE TO 15 BAR FOR A PERIOD OF 24 HOURS.

SYMBOLIC SAFETY SIGNAGE
SYMBOLIC SAFETY SIGNAGE SHALL COMPLY WITH SABS 1186 PART V AND SHALL BE OF THE PHOTOLUMINESCENT TYPE.
SIGNAGE SHALL BE INSTALLED SUCH AS TO CLEARLY INDICATE THE POSITIONS OF ALL FIRE EQUIPMENT AND ESCAPE ROUTES.
EACH FLOOR LEVEL SHALL BE NUMBERED IN THE ESCAPE STAIRS.
SIGNAGE ON DRAWING IS AN INDICATION OF SIGNAGE REQUIRED.
FINAL SIGNAGE TO BE DETERMINED ON SITE.
ADDITIONAL SIGNAGE TO BE ADDED SHOULD IT BE REQUESTED BY THE LOCAL AUTHORITIES.
FINAL FIRE SIGNAGE IS TO BE DETERMINED ON SITE WITH THE COUNCIL'S FIRE OFFICER.

FIRE DOORS
FIRE DOORS OF THE RATING AND WIDTH AS INDICATED ON THE DRAWINGS, SHALL BE INSTALLED AND SHALL COMPLY WITH SANS 1253.
ALL FIRE DOORS TO BE FITTED WITH SELF CLOSING MECHANISMS

FIRE ALARM / DETECTION
FIRE DETECTION AND ALARM SYSTEM SHALL BE INSTALLED AS INDICATED ON THE DRAWINGS AND IN ACCORDANCE WITH SANS 10139.

ESCAPE DOORS
ALL ESCAPE DOORS SHALL BE COMPLETE WITH FIRE ESCAPE IRONMONGERY.

FIRE ESCAPE ROUTES
FIRE ESCAPE ROUTES, INCLUDING CORRIDORS AND STAIRWAYS SHALL HAVE MINIMUM WIDTH OF 1500mm UNLESS SHOWN OTHERWISE .
ALL ESCAPE ROUTES SHALL HAVE A FIRE RESISTANCE AS INDICATED.
ALL EMERGENCY ROUTES SHALL HAVE A FIRE RESISTANCE AS INDICATED ON THE DRAWINGS.

FIRE SERVICES LEGEND

BREAK GLASS UNIT
HOSE REEL
FIRE HYDRANT
4,5kg DCP FIRE EXTINGUISHER
DIRECTIONAL ARROW
FIRE ESCAPE
60 MINUTE FIRE RATED WALL

FIRE DESIGN CONFIRMATION

DEEMED TO SATISFY WITH SANS 10400	N/A
RATIONAL ASSESSMENT	YES
RATIONAL DESIGN EQUIVALENT OR SUPERIOR TO SANS 10400	N/A

ISSUE DATE: 2022-07-13 REVISION: D

	FOR INFORMATION
	FOR APPROVAL
X	FOR TENDER
	FOR CONSTRUCTION
	AS-BUILT

REVISIONS

No	Date	Description	Rev By	Ckd By
A	02/06/2021	ISSUED FOR INFORMATION	A.D	H.R
B	29/06/2021	DRAWING UPDATED TO SUIT NEW ARCHITECTURE	S.M	H.R
C	05/08/2021	DRAWING UPDATED TO SUIT NEW ARCHITECTURE	S.M	H.R
D	2022/07/13	DRAWING UPDATED W.R.T - NEW ARCHITECTURE ADDED - ISSUED FOR TENDER	L.S	H.R

CONSULTMECH
Mechanical Engineers
09 Plantanus Street
Kuilsriver
7580
Cell.: (072) 948 4470
Tel.: (021) 903 1407
Email: info@consultmech.co.za

PROJECT	LAHAE LA SARS - BLOCK C		
	BROOKLYN		
DWG TITLE	FIRST STOREY - PROPOSED		
	FIRE SERVICES LAYOUT		
DWG NUMBER	21B09-F-503-04	REV.	D
DESIGNED BY	L.N SIBIYA	SCALE	1:100 @ A1
CHECKED BY	H.D ROUX	ECSA NUMBER	201070151
APPROVED BY	H.D ROUX	ECSA NUMBER	201070151

COPYRIGHT AND RIGHT OF REPRODUCTION OF THIS DRAWING OR ANY PORTION THEREOF IS RESERVED BY THE ENGINEERS